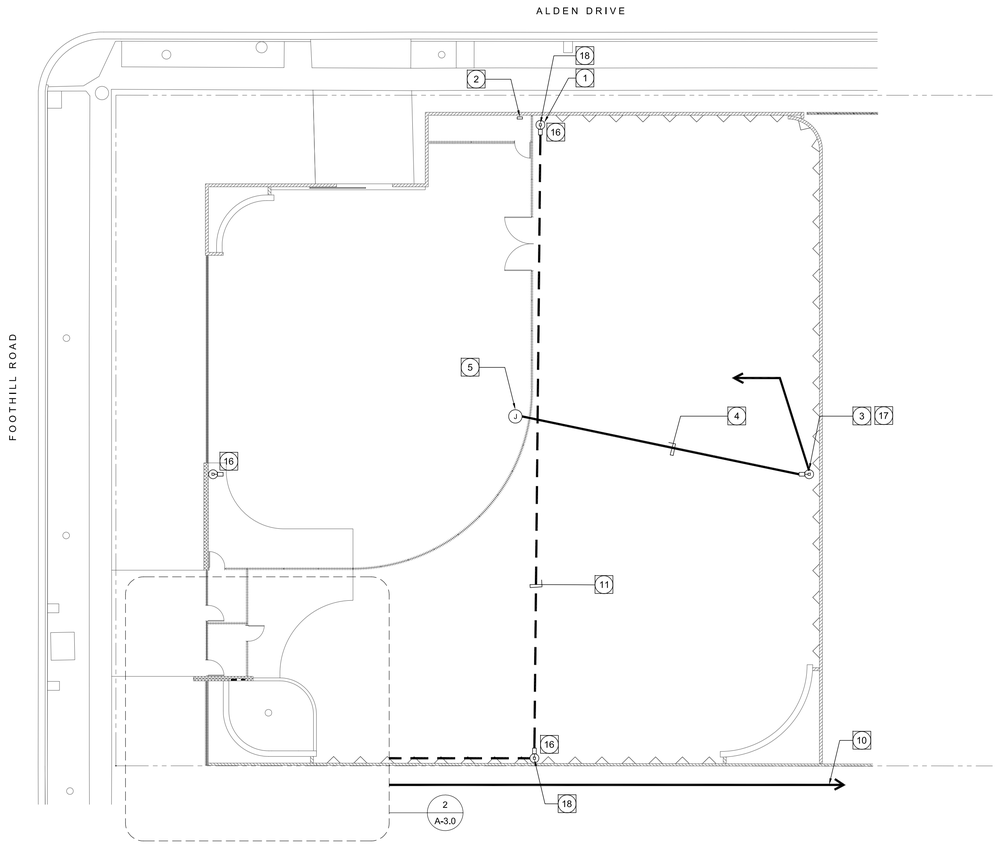


ELECTRICAL PLAN
SCALE: 1/16" = 1'-0"
4

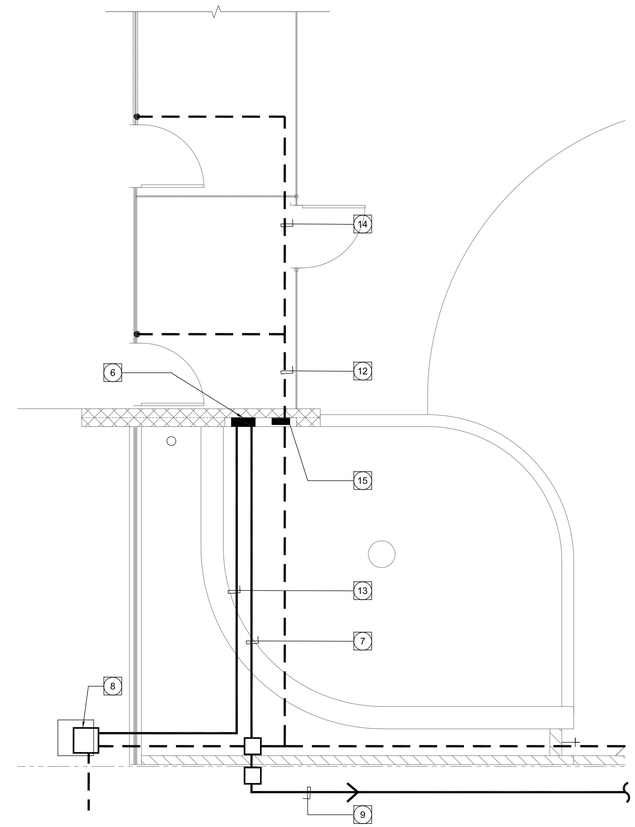

ENLARGED ELECTRICAL PLAN
SCALE: 1/4" = 1'-0"
2

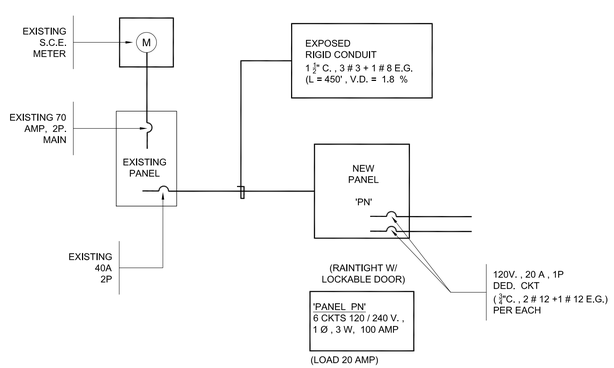


SINGLE LINE DIAGRAM
SCALE: N.T.S.
3

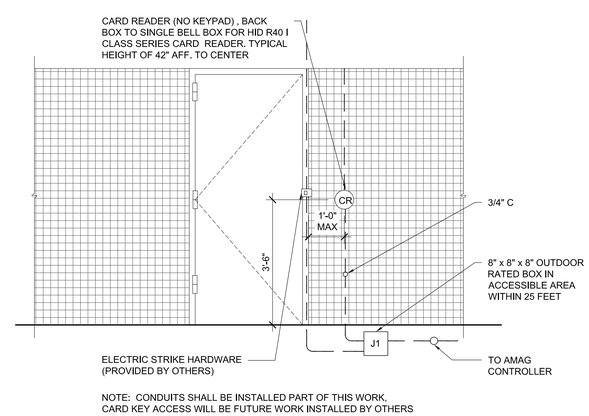


NOTE: CONDUITS SHALL BE INSTALLED PART OF THIS WORK, CARD KEY ACCESS WILL BE FUTURE WORK INSTALLED BY OTHERS

CARD READER CONNECTION
NOT TO SCALE
1

## KEYNOTES:

1. EXISTING LIGHT STANDARD WITH NEW LIGHT FIXTURE
2. RELOCATED TIME CLOCK
3. NEW LIGHT STANDARD, CONNECT TO THE NEAREST CIRCUIT FOR SITE LIGHT
4. 3/4" C.O. (PVC)
5. WEATHERPROOF 'J' BOX FOR FUTURE USE ,TERMINATE 6" ABOVE FINISH SURFACE
6. PNL 'PN', RAINTIGHT W/ LOCKABLE DOOR
7. 1" PVC ( SCHEDULE 80) CONDUIT U /G TO PANEL 'PN'
8. DATA CONTROL BOX
9. 1-1/2" Ø RIGID CONDUIT TO (E) ELECTRICAL PANEL - SEE 3 / E-1.O
10. FOR CONTINUATION - REFER TO SHEET # C-4.01
11. 1" PVC CONDUIT RUN UNDER GROUND AND STUB UP ABOVE LIGHT POLE CONCRETE BASE ( TERMINATE IN WEATHERPROOF AS 'J' BOX) FOR FUTURE CAMERAS
12. 1" Ø CONDUIT TO CARD KEY CONTROLLER BOX
13. 1" PVC CONDUIT POWER LINE FOR DATA BOX
14. 1" Ø TO GATES, PVC (UNDER GROUND) , RIGID (ABOVE GROUND)
15. CARD KEY 'AMAG' CONTROLLER BOX
16. NEW LIGHT FIXTURE AT (E) POLE, FX-1 BY: LSI, MODEL # XLCM-5-LED-SS-CW-UE-BRZ-PCI120
17. NEW LIGHT FIXTURE AND POLE, (LIGHT FIXTURE SAME AS ABOVE) POLE, BY: LSI, MODEL # 5SQB5-SO7G-28-BRZ-GA (SIZE TO MATCH EXISTING) - REFINISH POLE
18. RUN NEW DATA CONDUIT UP AGAINST LIGHT POLE (OR WITHIN LIGHT POLE IF POSSIBLE) & TERMINATE IN A 'AS' BOX 18" BELOW LIGHT FIXTURE - PAINT CONDUIT TO MATCH POLE FINISH.

## LEGEND:

POWER
DATA

## GENERAL NOTES:

1. ALL ELECTRICAL WORK SHALL BE INSTALLED IN ACCORDANCE WITH LATEST CITY OF BEVERLY HILLS ELECTRICAL CODE, 2011 NATIONAL ELECTRICAL CODE, 2013 CALIFORNIA ENERGY EFFICIENCY STANDARDS AND 2013 CALIFORNIA ENERGY CODE.
2. THE DRAWINGS INDICATE, IN A DIAGRAMMATIC MANNER, THE DESIRED LOCATIONS AND ARRANGEMENT OF THE COMPONENTS OF THE ELECTRICAL WORK. DETERMINE EXACT CONDUIT ROUTING, CONDUIT BENDS, AUXILIARY JUNCTION BOXES, SUPPORTS, AND UNDEFINED CONSTRUCTION DETAILS AS A JOB CONDITION TO BE INSTALLED IN ACCORDANCE WITH APPLICABLE CODE REQUIREMENTS.
3. ELECTRICAL CONTRACTOR SHALL VERIFY EXISTING CONDITIONS PRIOR TO BID.
4. SHOP DRAWING SUBMITTALS ARE REQUIRED FOR THE FOLLOWING MATERIALS/EQUIPMENT:
   a. LIGHTING FIXTURES.
5. EXACT ROUTING OF ALL CONDUIT SHALL BE DETERMINED BY THE CONTRACTOR. ANY COST REQUIRED TO ROUTE CONDUIT DIFFERENTLY THAN IS SHOWN ON THESE DRAWINGS SHALL BE INCURRED BY THE CONTRACTOR.
6. WHERE A GROUND WIRE IS NOT SPECIFIED, CONDUIT AND IT'S CONNECTIONS SHALL BE U.L. APPROVED FOR USE AS GROUNDING CONDUCTORS.
7. FEEDER RUNS IN NON-METTALLIC CONDUIT SHALL CARRY A GREEN INSULATED CODE SIZED GROUNDING CONDUCTOR PROPERLY CONNECTED FOR ELECTRICAL GROUND CONTINUITY.
8. SHEET METAL SCREWS SHALL NOT BE USED TO CONNECT GROUNDING CONDUCTORS TO ENCLOSURES.

RTK Architects, Inc.
Architecture ▪ Planning ▪ Interior
www.rtkarchitects.com
3975 Landmark St. Ste.#400 Culver City, CA 90232 310 / 837-3806

| No. | Date | By | Revision |
|---|---|---|---|
| | | | |

BID SET

| | |
|---|---|
| Job No. | 1511800 |
| Submittal | |
| Issue Date | 4/12/16 |
| Drawn By | |
| Checked By | |

ELECTRICAL

CITY OF BEVERLY HILLS DOG PARK
344 FOOTHILL ROAD
BEVERLY HILLS, CA 90210

E-1.0

5/2/16

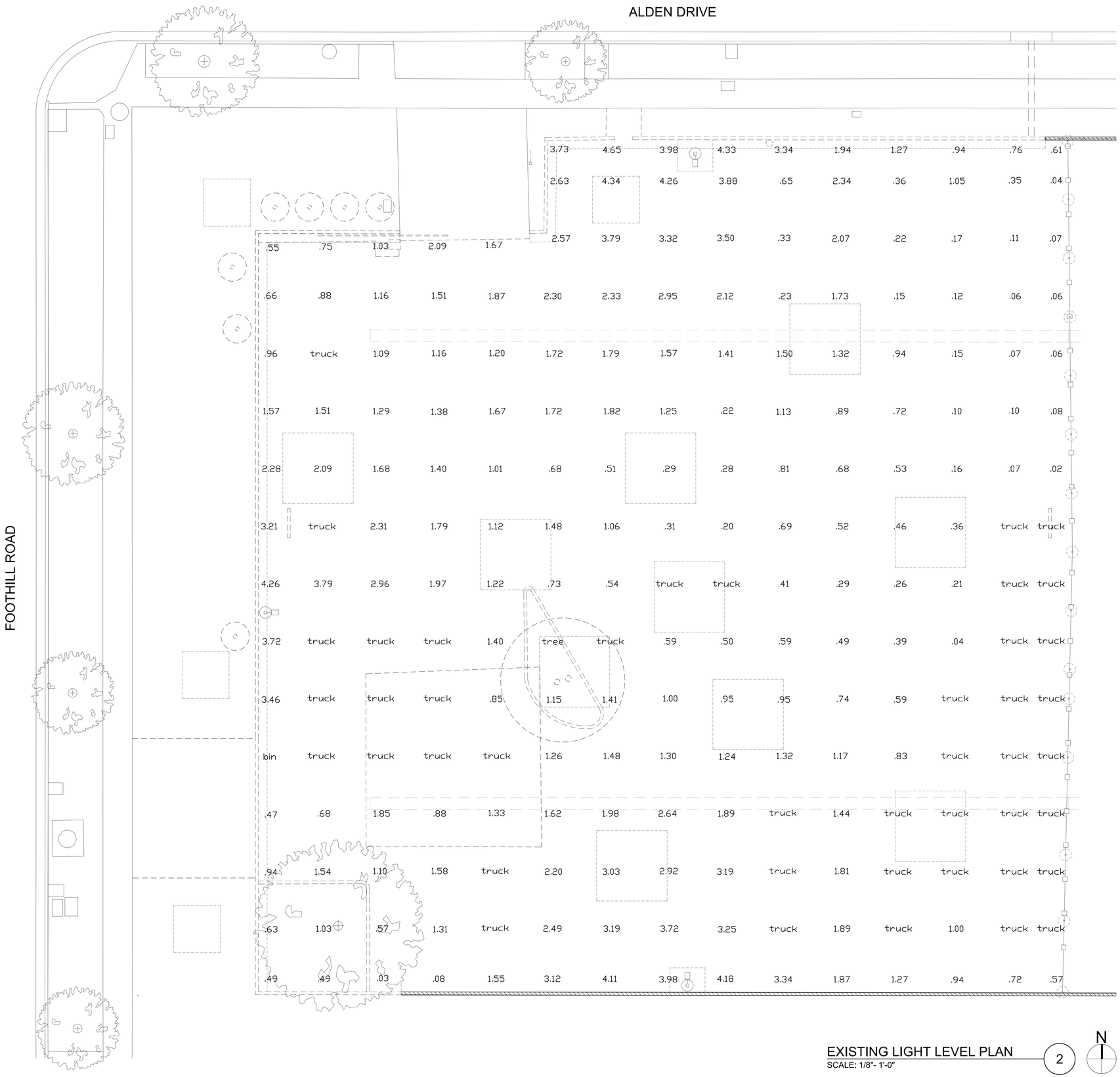


EXISTING LIGHT LEVEL PLAN (2)
SCALE: 1/8"- 1'-0"

N

**Spread Sheet #1 - Actual Light Readings (measured in footcandles)**

| | A | B | C | D | E | F | G | H | I | J | K | L | M | N | O | |
|---|---|---|---|---|---|---|---|---|---|---|---|---|---|---|---|---|
| 1 | | | | | | 0.61 | 0.54 | bin | 0.15 | bin | 0.07 | bin | bin | 0.04 | 0.04 | 1 |
| 2 | | | | | | 0.14 | 1.15 | 0.54 | 0.63 | 0.65 | 0.45 | 0.36 | 0.05 | 0.35 | 0.04 | 2 |
| 3 | 0.55 | 0.47 | 0.53 | 0.51 | 0.42 | 0.37 | 0.76 | 0.40 | 0.31 | 0.33 | 0.26 | 0.22 | 0.17 | 0.11 | 0.07 | 3 |
| 4 | 0.66 | 0.63 | 0.66 | 0.63 | 0.54 | 0.68 | 0.35 | 0.31 | 0.23 | 0.23 | 0.29 | 0.15 | 0.12 | 0.06 | 0.06 | 4 |
| 5 | 0.96 | truck | 0.84 | 0.66 | 0.70 | 0.46 | 0.31 | 0.27 | 0.17 | 0.18 | 0.15 | 0.11 | 0.15 | 0.07 | 0.06 | 5 |
| 6 | 1.57 | 1.51 | 1.29 | 1.13 | 0.82 | 0.57 | 0.41 | 0.25 | 0.22 | 0.18 | 0.15 | 0.13 | 0.10 | 0.10 | 0.08 | 6 |
| 7 | 2.28 | 2.09 | 1.68 | 1.40 | 1.01 | 0.68 | 0.51 | 0.29 | 0.28 | 0.22 | 0.19 | 0.14 | 0.12 | 0.07 | 0.02 | 7 |
| 8 | 3.21 | truck | 2.31 | 1.79 | 1.12 | 0.75 | 0.52 | 0.31 | 0.20 | 0.28 | 0.23 | 0.20 | 0.15 | truck | truck | 8 |
| 9 | 4.26 | 3.79 | 2.96 | 1.97 | 1.22 | 0.73 | 0.54 | truck | truck | 0.41 | 0.29 | 0.26 | 0.21 | truck | truck | 9 |
| 10 | 3.72 | truck | truck | truck | 1.40 | tree | truck | truck | truck | 0.59 | 0.49 | 0.39 | 0.04 | truck | truck | 10 |
| 11 | 3.46 | truck | truck | truck | 0.85 | 1.15 | 1.41 | 1.00 | truck | 0.95 | 0.74 | 0.59 | truck | truck | truck | 11 |
| 12 | bins | truck | truck | truck | truck | 1.26 | 1.48 | 1.30 | 1.24 | 1.32 | 1.17 | 0.83 | truck | truck | truck | 12 |
| 13 | 0.47 | 0.68 | 1.85 | 0.88 | 1.33 | 1.62 | 1.98 | 2.64 | 1.89 | truck | 1.44 | truck | truck | truck | truck | 13 |
| 14 | 0.94 | 1.54 | 1.10 | 1.58 | truck | 2.20 | 3.03 | 2.92 | 3.19 | truck | 1.81 | truck | truck | truck | truck | 14 |
| 15 | 0.63 | 1.03 | 0.57 | 1.31 | truck | 2.49 | 3.19 | 3.72 | 3.25 | truck | 1.89 | truck | 1.00 | truck | truck | 15 |
| 16 | 0.49 | 0.49 | 0.03 | 0.08 | 1.55 | 3.12 | 4.11 | 3.98 | 4.18 | 3.34 | 1.87 | 1.27 | 0.94 | 0.72 | 0.57 | 16 |
| | A | B | C | D | E | F | G | H | I | J | K | L | M | N | O | |

**Spread Sheet #2 - Hybird (measured in footcandles)**

| | A | B | C | D | E | F | G | H | I | J | K | L | M | N | O | |
|---|---|---|---|---|---|---|---|---|---|---|---|---|---|---|---|---|
| 1 | | | | | | 3.73 | 4.65 | 3.98 | 4.33 | 3.34 | 1.94 | 1.27 | 0.94 | 0.76 | 0.61 | 1 |
| 2 | | | | | | 2.63 | 4.34 | 4.26 | 3.88 | 0.65 | 2.34 | 0.36 | 1.05 | 0.35 | 0.04 | 2 |
| 3 | 0.55 | 0.75 | 1.03 | 2.09 | 1.67 | 2.57 | 3.79 | 3.32 | 3.50 | 0.33 | 2.07 | 0.22 | 0.17 | 0.11 | 0.07 | 3 |
| 4 | 0.66 | 0.88 | 1.16 | 1.51 | 1.87 | 2.30 | 2.33 | 2.95 | 2.12 | 0.23 | 1.73 | 0.15 | 0.12 | 0.06 | 0.06 | 4 |
| 5 | 0.96 | truck | 1.09 | 1.16 | 1.20 | 1.72 | 1.79 | 1.57 | 1.41 | 1.50 | 1.32 | 0.94 | 0.15 | 0.07 | 0.06 | 5 |
| 6 | 1.57 | 1.51 | 1.29 | 1.38 | 1.67 | 1.72 | 1.82 | 1.25 | 0.22 | 1.13 | 0.89 | 0.72 | 0.10 | 0.10 | 0.08 | 6 |
| 7 | 2.28 | 2.09 | 1.68 | 1.40 | 1.01 | 0.68 | 0.51 | 0.29 | 0.28 | 0.81 | 0.68 | 0.53 | 0.16 | 0.07 | 0.02 | 7 |
| 8 | 3.21 | truck | 2.31 | 1.79 | 1.12 | 1.48 | 1.06 | 0.31 | 0.20 | 0.69 | 0.52 | 0.46 | 0.36 | truck | truck | 8 |
| 9 | 4.26 | 3.79 | 2.96 | 1.97 | 1.22 | 0.73 | 0.54 | 0.40 | 0.40 | 0.41 | 0.29 | 0.26 | 0.21 | truck | truck | 9 |
| 10 | 3.72 | truck | truck | truck | 1.40 | tree | truck | 0.59 | 0.50 | 0.59 | 0.49 | 0.39 | 0.04 | truck | truck | 10 |
| 11 | 3.46 | truck | truck | truck | 0.85 | 1.15 | 1.41 | 1.00 | 0.95 | 0.95 | 0.74 | 0.59 | truck | truck | truck | 11 |
| 12 | bins | truck | truck | truck | truck | 1.26 | 1.48 | 1.30 | 1.24 | 1.32 | 1.17 | 0.83 | truck | truck | truck | 12 |
| 13 | 0.47 | 0.68 | 1.85 | 0.88 | 1.33 | 1.62 | 1.98 | 2.64 | 1.89 | truck | 1.44 | truck | truck | truck | truck | 13 |
| 14 | 0.94 | 1.54 | 1.10 | 1.58 | truck | 2.20 | 3.03 | 2.92 | 3.19 | truck | 1.81 | truck | truck | truck | truck | 14 |
| 15 | 0.63 | 1.03 | 0.57 | 1.31 | truck | 2.49 | 3.19 | 3.72 | 3.25 | truck | 1.89 | truck | 1.00 | truck | truck | 15 |
| 16 | 0.49 | 0.49 | 0.03 | 0.08 | 1.55 | 3.12 | 4.11 | 3.98 | 4.18 | 3.34 | 1.87 | 1.27 | 0.94 | 0.72 | 0.57 | 16 |
| | A | B | C | D | E | F | G | H | I | J | K | L | M | N | O | |

LIGHT READING REPORTS (1)

RTK Architects, Inc.
Architecture ▪ Planning ▪ Interior
www.rtkarchitects.com
3975 Landmark St. Ste.#400 Culver City, CA 90232 310 / 837-3606

| No. | Date | By | Revision |
|---|---|---|---|
| | | | |

| | |
|---|---|
| BID SET | |
| Job No. | 1511800 |
| Submittal | |
| Issue Date | 4/12/16 |
| Drawn By | |
| Checked By | |

LIGHTING LEVEL PLAN & REPORTS

CITY OF BEVERLY HILLS DOG PARK
344 FOOTHILL ROAD
BEVERLY HILLS, CA 90210

LT-1.0
5/2/16